STRATUM CorX RMV1-11 1x2 segmentable R-MACPHY optical node

- Node for Distributed Access Architecture networks
- Downstream frequency range up to 1218 MHz
- Upstream frequency range up to 204 MHz
- GaN output stage
- Ingress management by the RSW module
- Exchangeable PSU on demand (230 V AC / -48 V DC)

General description

The STRATUM CorX RMV1-11 optical node is an ideal choice when involving DAA technology is needed in shelf environment. Based on the type of the chosen RMD, Vecima SC-1D, the device is able to handle one forward path and one or two reverse path segments. The fully electronic alignment in both signal directions ensures an easy and quick installation. This node type can be ordered with optional ingress control switch.

Technical specifications

R-PHY parameters [1]	
DS DOCSIS 3.0 (SC-QAM) channel number	158
DS DOCSIS 3.1 (192 MHz OFDM) channel number	6
US DOCSIS 3.0 (SC-QAM) channel number	12
US DOCSIS 3.1 (96 MHz OFDMA) channel number	2
OOB	NDF/NDR
CCAP port	10 GE SFP+ transceiver
Forward path RF parameters	
Frequency range [MHz]	85...1218
Equalizer breakpoint frequency [MHz]	1218
RF attenuator range [dB]	0...20 [2]
RF equaliser range [dB]	6...22 [2]
Flatness [dB]	±0.75
Output return loss (40MHz -1.5dB/octave) [dB]	>18
Maximum output RF level @ 1218 MHz [dBµV]	112 [3]
Total composite power [dBmV]	72
Output RF testpoint attenuation [dB]	20±1
Reverse path RF parameters	
Frequency range [MHz]	5...204
Diplex filter [MHz]	65/85, 85/105, 204/258
RF input level [dBµV]	60...80 [4]
RF attenuator range [dB]	0...20 [2]
Flatness [dB]	±0.5
Input return loss (40MHz -1.5dB/octave) [dB]	>18
Reverse path RF testpoint attenuation referred to the RPD input [dB]	0
Ingress control switch (RSW) states	0 dB / -6 dB / -50 dB / HPF 20 MHz

Specifications are subject to change without notice!

General parameters

RF connector	F-type
Testpoint connector	F-type
Power supply voltage	230 VAC or -48 VDC
Power consumption[W]	97(5)
Temperature range [°C]	-20...+60
Dimensions [mm]	483x450x87
Weight [kg]	6.8

(1) For more details check the Vecima SC-1D datasheet
(2) Adjustable in 0.5 dB steps
(3) Full spectrum with 12 dB tilt between 258 MHz and 1218 MHz at a PreBER of <10^{-9}, the high current mode is activated
(4) The level of a single SC-QAM channel of 6 MHz
(5) The values contain the power consumption of one SFP module.

Block diagram

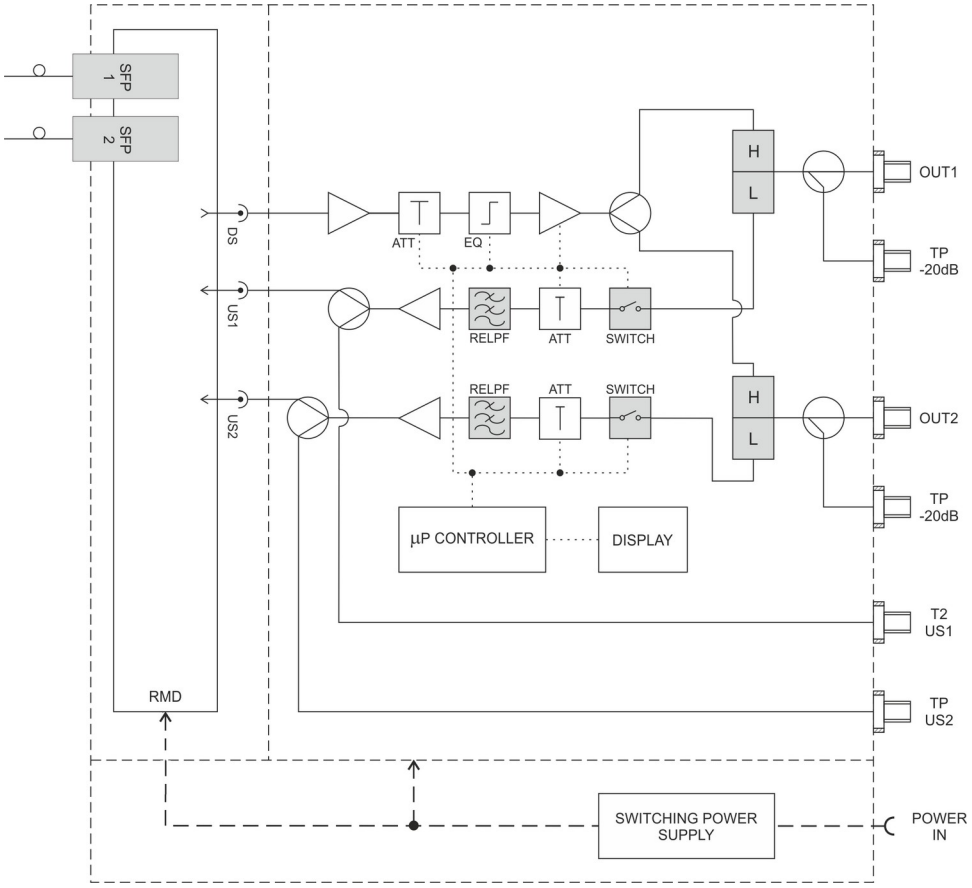

Specifications are subject to change without notice!

Ordering information

C	X	-	R	M	X	X	-	1	X	-	X	X	-	X	-	X	X	X

Type of RMD	
V1	Vecima SC-1D

Number of output stages	
1	1 active output stage

Housing style	
R2	Rack mounted, 2U high

Type of the power supply	
L	230 V AC power supply
D	-48 V DC power supply

Type of the diplex filter	
65	Pluggable 65/85MHz diplex filter
85	Pluggable 85/105MHz diplex filter
204	Pluggable 204/258MHz diplex filter